License Plate Detection System using Jetson Nano

Concepts and Application

Gautam Ramesh, 7027187
Siddhanth Sharma, 7027189
Shubhankar Dumka, 7027187

31. Dezember 2025

1. Introduction
2. Description of Application
3. Challenges
4. Solutions
5. Results
6. References

Introduction

Introduction I

- The project focuses on designing a cost-effective, single-camera car license plate recognition system.
- Traditional automatic number plate recognition systems rely on expensive hardware and centralized processing [Nat24].
- The system enables license plate detection using compact deep-learning models deployed on embedded devices. [Tan+22] [JCQ23; Cor21].
- Application: High vehicle throughput such as airport departures and arrivals, where manual verification is inefficient and error-prone. Focused on automated entry/exit recognition and dwell-time-based billing.

Description of Application

Description of Application I

- Market Basket Analysis ([**majumdar_apriori_2015**]) is a technique used by retailers to understand the purchase behavior of customers. At its core, it uses the Apriori Algorithm.
- It helps retailers to identify the relationship between the items that customers buy together.
- Retailers can use this information to optimize their store layout, product placement, and marketing strategies.
- Boost sales.
- Uncover interesting patterns. People who buy diapers are likely to buy beer.

Description of Application II

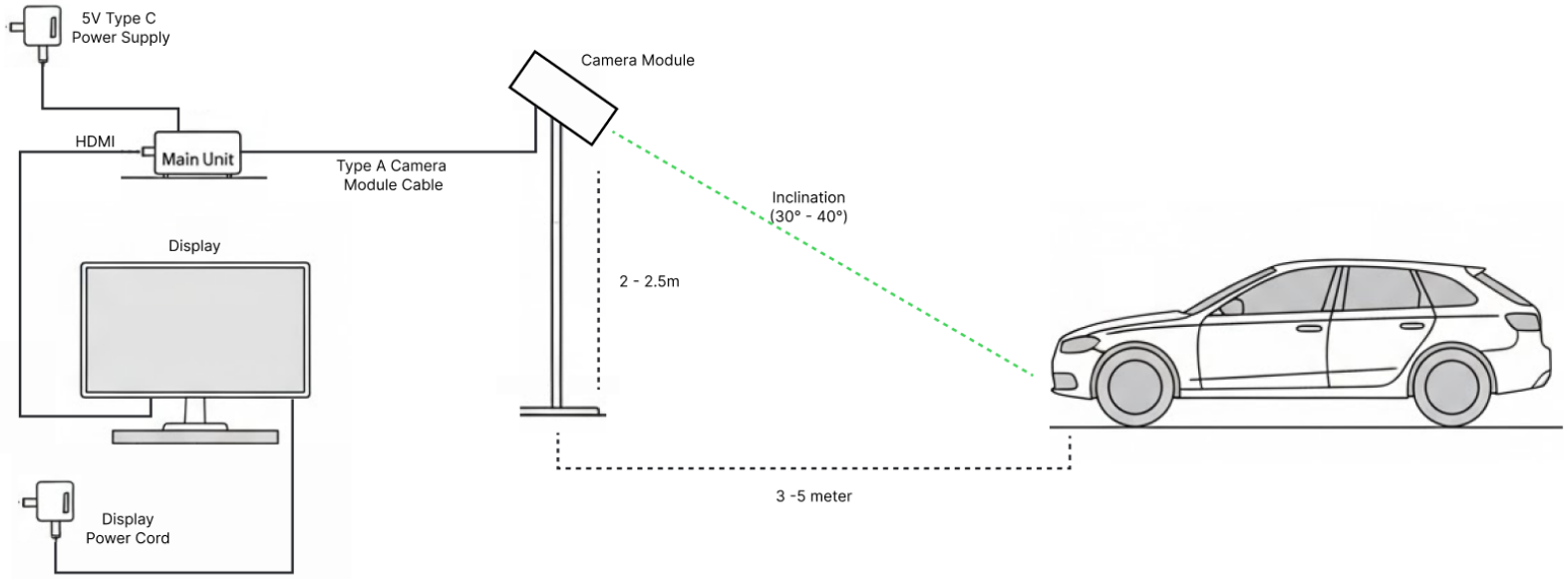

Abbildung: License Plate Detection System.

Challenges

The Apriori Principle in Market Basket Analysis

Apriori Principle in Itemsets

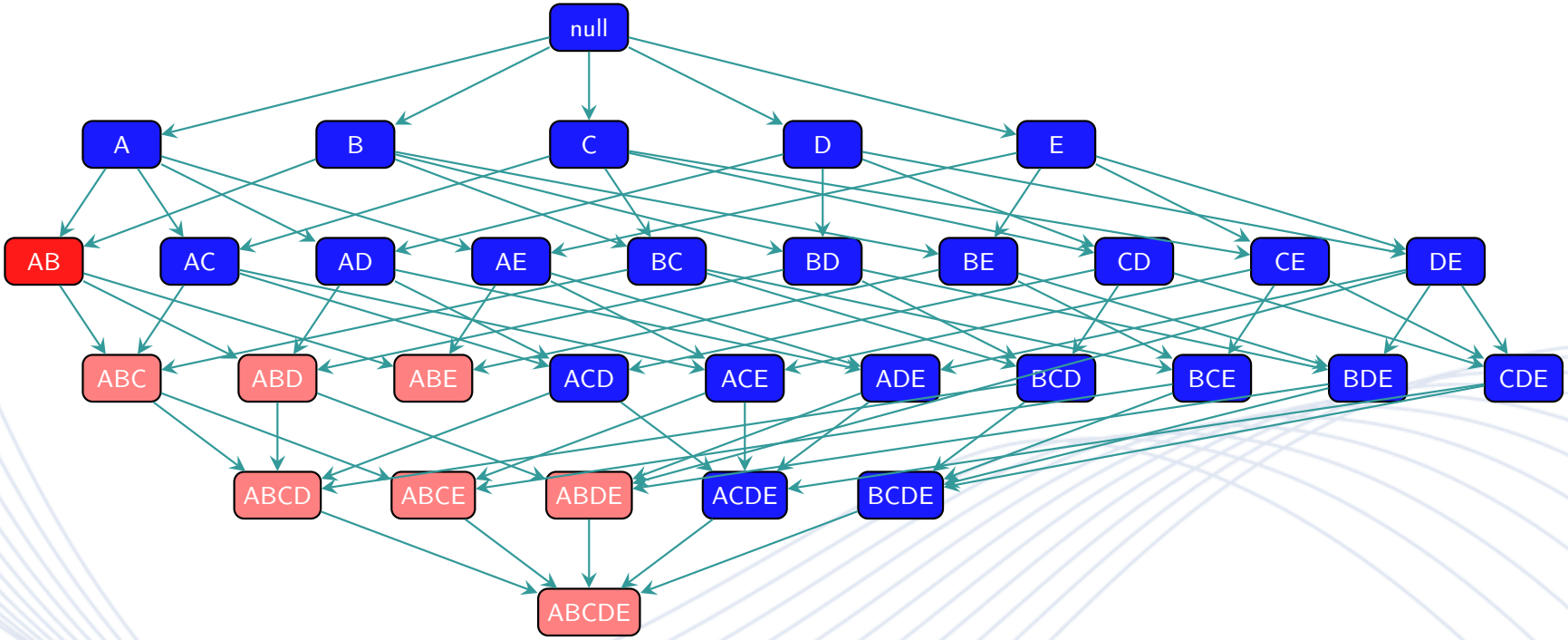

Abbildung: Infrequent itemsets based on the Apriori Principle. The nodes dependant on `AB` are highlighted in red

Solutions

Apriori Algorithm Use Case: Recommending Items for a Farmer's Market

Case Description

- Farmer's Market: It is a place where farmers come directly to sell their products, enabling them to earn greater profits on their produce by selling to consumers directly.
- Objective: To find possible products to sell in the farmer's market, based on data collected from previously establised markets.

Apriori Algorithm Use Case: Recommending Items for a Farmer's Market I

The following code highlights the data loading and pre-processing activities in Python. Here we load the data and remove columns regarding social media information, updatetime and location.

```
import pandas as pd
import os
print(os.getcwd())
df=pd.read_csv("study_notes/datasets/farmers_market.csv")
print(df)

print(df.columns.tolist())

cols_to_keep = ['Market_ID', 'Market_Name', 'Is_Organic', '
     Is_Baked_Goods', 'Is_Cheese', 'Is_Crafts', 'Is_Flowers', 'Is_Eggs'
     , 'Is_Seafood',
'Is_Herbs', 'Is_Vegetables', 'Is_Honey', 'Is_Jams', 'Is_Maple', '
     Is_Meat', 'Is_Nursery', 'Is_Nuts',
'Is_Plants', 'Is_Poultry', 'Is_Prepared', 'Is_Soap', 'Is_Trees', '
     Is_Wine', 'Is_Coffee', 'Is_Beans',
'Is_Fruits', 'Is_Grains', 'Is_Juices', 'Is_Mushrooms', 'Is_Pet_Food', '
     Is_Tofu', 'Is_Wild_Harvested']
df = df[cols_to_keep]
```

Results

Results

- The Apriori Algorithm enables mining datasets for frequent items.
- Although it has a few limitations, it is widely used across multiple industries to gather analysis on customer behavior and enable decision making processes. Thus, allowing it to be an indispensable tool at an analyst's disposal.

University of Applied Sciences
HOCHSCHULE EMDEN·LEER

Thanks a lot

for your attention

References

References I

[Cor21] A. Cortés. "Edge AI for Real-Time Computer Vision Applications". In: *Proceedings of the International Conference on Embedded Systems*. 2021, S. 88–95.

[JCQ23] Glenn Jocher, Ayush Chaurasia und Jing Qiu. *Ultralytics YOLOv8*. 2023. URL: https://github.com/ultralytics/ultralytics.

[Nat24] National Airports Council. *Vehicle Access Management Challenges in Modern Airports*. Techn. Ber. National Airports Council, 2024.

[Tan+22] Y. Tan u. a. "A Survey on Automated Number Plate Recognition Systems". In: *IEEE Access* 10 (2022), S. 12345–12360. DOI: 10.1109/ACCESS.2022.XXXXXXX.